Multiply fractions by integers

1 Complete the calculations.

a)

$\frac{2}{7} \times 2 = \boxed{\frac{4}{7}}$

b)

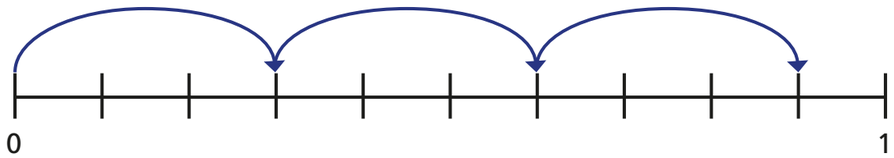

$3 \times \frac{3}{10} = \boxed{\frac{9}{10}}$

2 **a)** Shade the bar models to show $\frac{2}{5} \times 4$

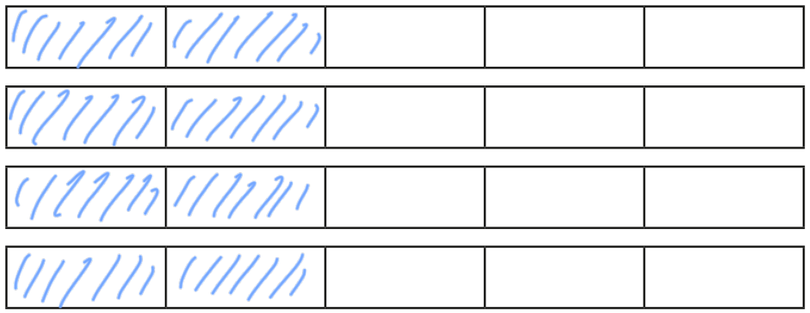

b) Complete the multiplication.

$\frac{2}{5} \times 4 = \boxed{\frac{8}{5}} = 1\frac{3}{5}$

3 Complete the calculations.

a)

$\frac{1}{3} \times 1 = \boxed{\frac{1}{3}}$

$\frac{1}{3} \times 2 = \boxed{\frac{2}{3}}$

$\frac{1}{3} \times 3 = \boxed{1}$

$\frac{1}{3} \times 4 = \boxed{1\frac{1}{3}}$

$\frac{1}{3} \times 5 = \boxed{1\frac{2}{3}}$

$\frac{1}{3} \times 6 = \boxed{2}$

b)

$\frac{3}{4} \times 1 = \boxed{\frac{3}{4}}$

$\frac{3}{4} \times 2 = \boxed{1\frac{1}{2}}$

$\frac{3}{4} \times 3 = \boxed{2\frac{1}{4}}$

$\frac{3}{4} \times 4 = \boxed{3}$

$\frac{3}{4} \times 5 = \boxed{3\frac{3}{4}}$

$\frac{3}{4} \times 6 = \boxed{4\frac{1}{2}}$

What patterns do you notice?

4 Complete the multiplication.

$2\frac{2}{5} \times 3 = \boxed{7\frac{1}{5}}$

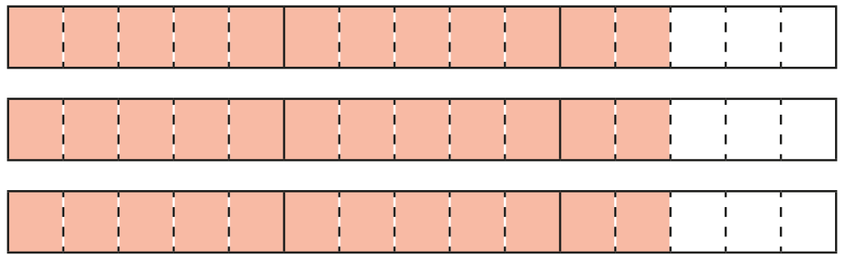

What method did you use? Is there a different method you could have used?

© White Rose Maths 2019

5 Match the calculations.

$\frac{2}{3} + \frac{2}{3}$	$\frac{1}{2} \times 6$
$\frac{1}{4} \times 24$	$18 \times \frac{1}{4}$
$\frac{3}{4} + \frac{3}{4} + \frac{3}{4} + \frac{3}{4}$	$\frac{1}{6} \times 10$
$\frac{5}{12} \times 4$	$12 \times \frac{1}{2}$
$1\frac{1}{2} \times 3$	$\frac{1}{3} \times 4$

6 Write each answer as a mixed number in its simplest form.

a) $1\frac{1}{5} \times 2 =$ $2\frac{2}{5}$

b) $2\frac{1}{6} \times 3 =$ $6\frac{1}{2}$

c) $2\frac{2}{5} \times 4 =$ $9\frac{3}{5}$

d) $2\frac{2}{5} \times 5 =$ 12

e) $7 \times 3\frac{1}{2} =$ $24\frac{1}{2}$

f) $\frac{11}{15} \times 7 =$ $5\frac{2}{15}$

7 Fill in the missing numbers.

a) $2\frac{\boxed{2}}{7} \times 3 = 6\frac{6}{7}$

b) $2\frac{\boxed{4}}{8} \times 3 = 7\frac{1}{2}$

8 Tommy's dog eats $3\frac{1}{2}$ tins of food a week.

How many tins does she eat in a year?

182

9

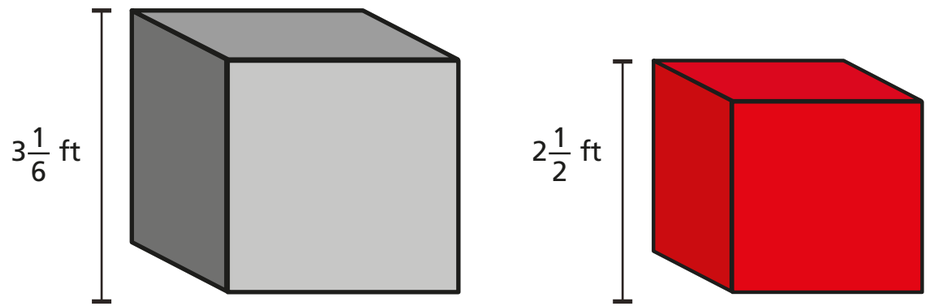

Jack builds a tower using grey blocks.

Alex builds a tower using red blocks.

The towers are exactly the same height.

How many blocks could they each have used?

Jack could use 15 and Alex use 19

© White Rose Maths 2019